Part 2-D) Installation with Tsukayu adaptive brackets & plates assembly kit

(xi) Suzuki VL1500LC Intruder

Two hardware kits are needed: a) Q-TSU9928P adaptive brackets kit; b) Q-9928 bracket plates assembly kit

Fig. 2-D-(xi)-1

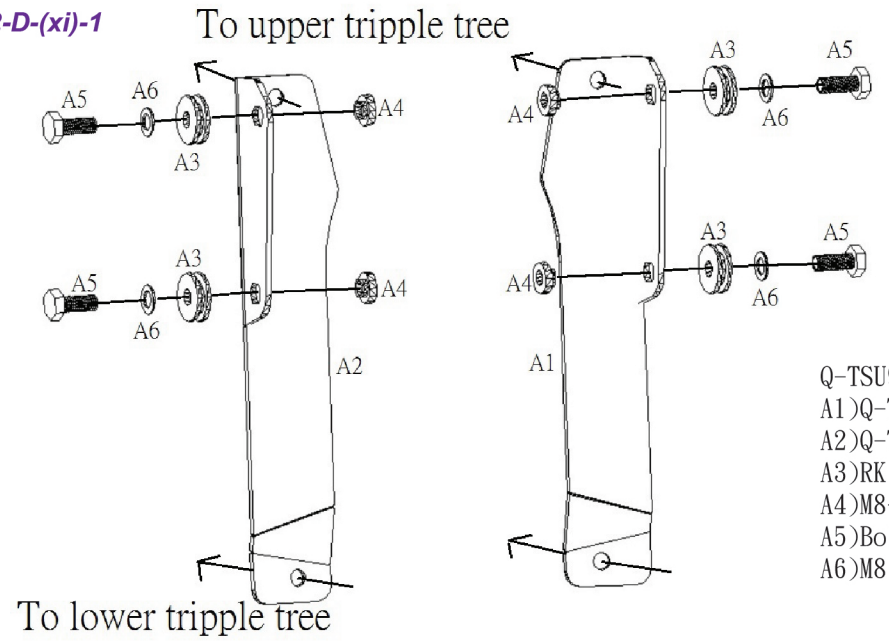

Q-TSU9928P adaptive brackets kit includes:
A1)Q-TSU9928P left x 1pcs
A2)Q-TSU9928P right x 1pcs
A3)RK Spacers 7.6mm x 4
A4)M8-MS_NUT (M8) x 4pcs
A5)Bolt M8 x 20 (HEX Head) x 4pcs
A6)M8 washer x 20

Fig. 2-D-(xi)-2

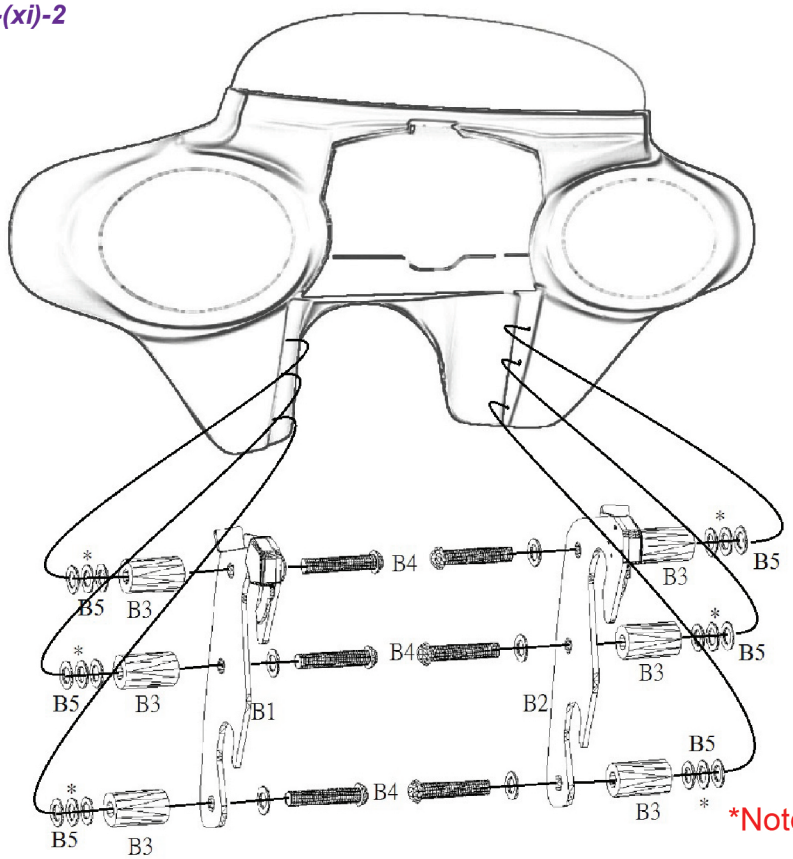

Q-9928 bracket plates kit includes:
B1)Q-9928 left x 1pcs
B2)Q-9928 right x 1pcs
B3)Spacer 31mm(L), 8.5mm(I), 18mm(O) x 6pcs
B4)Bolt M8 x 50 (Round Head) x 6pcs
B5)M8 Washer x 20

*Note: Refer to Step 3

1. Cover gas tank and front fender with protective material.

2. Install the Q-TSU9928p bracket assembly as shown in Fig.2-D-(xi)-1, the turn signal bar should be removed temporarily (turn signal bar is not shown in the figure). Measure the distance between the slots on left and right quick release latches, this distance will be used to adjust the distance between the bracket plates on fairing, you need to measure it as accurate as possible, we suggest measuring in mm.

*3. Install the mounting plates assembly as shown in Fig.2-D-(xi)-2. Add M8 washers if the distance of the two mounting plates doesn't perfectly match the distance between the two slots of Q-TSU9928p. The spacers provided are close to what you need, but you may still need to add washers until they perfectly match, make sure you use same number of spacers and washers for all holes. Don't mix up Left and Right bracket plates, the latches come with the bracket plates. Try to put the fairing on, normally you will need to modify the number of washers several times until they match.

4. Now put the fairing on, you may need a helper for doing this step easier. Make sure the bracket plates are tightened securely. Latch the both side bracket plates securely. Tighten all the bolts on the fairing and all bolts on the whole mounting system.

Copyright © Tsukayu - All rights reserved